MALE END VIEW	FEMALE END VIEW	WIRING DIAGRAM

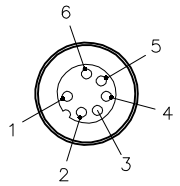

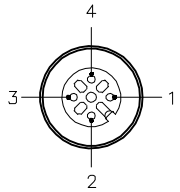

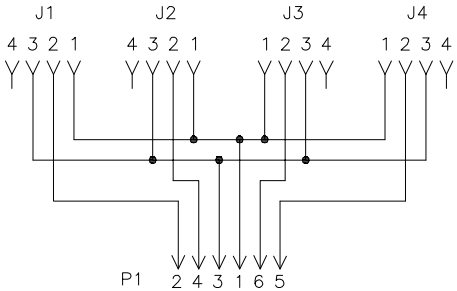

SPECIFICATIONS	
CONTACT CARRIER MATERIAL	NYLON OR TPU
MOLDED HEAD MATERIAL/COLOR	TPU/YELLOW
CONTACT MATERIAL/PLATING	BRASS/GOLD
COUPLING NUT MATERIAL/PLATING	BRASS/NICKEL
RATED CURRENT [A]	2.0 A
RATED VOLTAGE [V]	60 VAC/75 VDC
OUTER JACKET MATERIAL/COLOR	PVC/GRAY (P1), PVC/YELLOW (J1–J4)
CONDUCTOR INSULATION MATERIAL	PVC
NUMBER OF CONDUCTOR [AWG]	6x24 AWG (P1), 3x24 AWG (J1–J4)
TEMPERATURE RATING	–40˚C to +105˚C (–40˚F to +221˚F)
PROTECTION CLASS	MEETS NEMA 1,3,4,6P AND IEC IP68

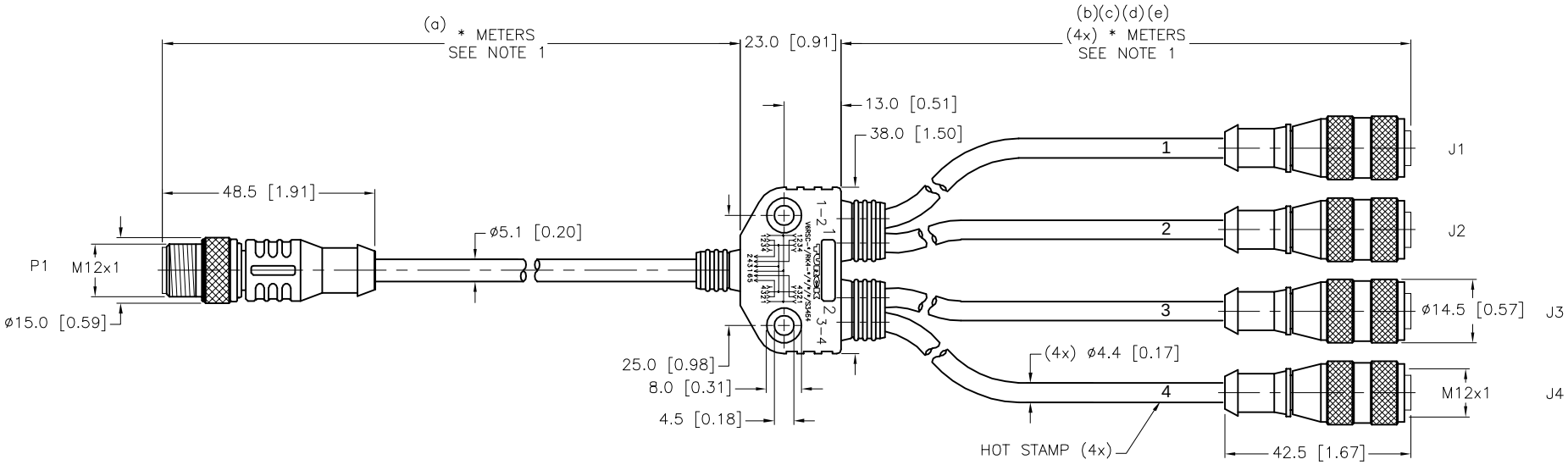

CABLE LENGTH	TOLERANCE *
ALL LENGTHS	+ 4% (OR 50mm) OF LENGTH – 0% (OR 0mm) OF LENGTH WHICHEVER IS GREATER
STRIP LENGTH	**TOLERANCE ***
0–7mm	±0.5mm
8–29mm	±1.0mm
30–49mm	±2.0mm
50–69mm	±3.0mm
70–100mm	±4.0mm
OVER 100mm	±5.0mm
* UNLESS OTHERWISE SPECIFIED	

SOURCE DRAWING - FOR REFERENCE ONLY

NOTES:

1. "*" INDICATES CABLE LENGTH IN METERS. CONTACT TURCK TO ORDER SPECIFIC LENGTHS.

2. LENGTHS 10 METERS AND GREATER WILL BE ROUNDED TO THE NEAREST WHOLE METER.

3. "/S3454" DESIGNATES 4 BRANCH SPLITTER WITH WIRING FOR DEVICES WITH SIGNAL ON PIN 2.

REV	DESCRIPTION	BY	DATE	ECO NO.
A	DRAWING RELEASE	TV	11/15/17	

RELATED DOCUMENTS
1.
2.
3.
4.

3RD ANGLE PROJECTION

THIS DRAWING IS CONFIDENTIAL AND THE PROPERTY OF TURCK INC. USE OF THIS DOCUMENT WITHOUT WRITTEN PERMISSION IS PROHIBITED.

TURCK

3000 CAMPUS DRIVE
MINNEAPOLIS, MN 55441
1–800–544–7769
(763) 553–7300
(763) 553–0708 fax
www.turck.us

MATERIAL
SEE SPECIFICATIONS

FINISH
SEE SPECIFICATIONS

ALL DIMENSIONS DISPLAYED ON THIS DRAWING ARE FOR REFERENCE ONLY

CONTACT TURCK FOR MORE INFORMATION

DRFT TV
APVD
DATE 10/26/17
SCALE 1=1.5

UNIT OF MEASUREMENT
MILLIMETER [INCH]
DO NOT SCALE THIS DRAWING

DESCRIPTION
V6RSC–*/RK4–*/*/*/*/S3454
(a) (b)(c)(d)(e)

IDENTIFICATION NO.

REV A

FILE: 777040648

SHEET 1 OF 1